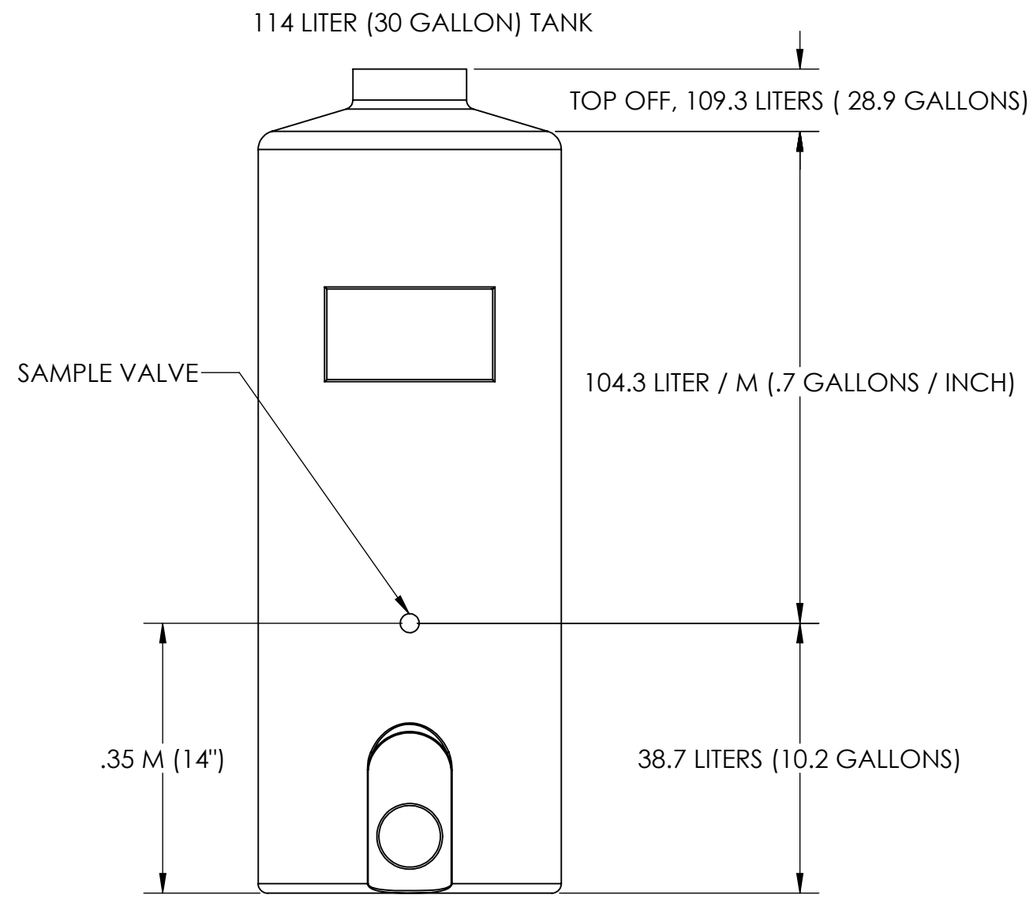
114 LITER (30 GALLON) TANK
TOP OFF, 109.3 LITERS ( 28.9 GALLONS)
SAMPLE VALVE
104.3 LITER / M (.7 GALLONS / INCH)
.35 M (14")
38.7 LITERS (10.2 GALLONS)